Heat allocation cylinder

SVS/SVWS

C

Connection of CH buffer tank with domestic water heating through stainless steel coil for DHW.

Dimensions

type SVS

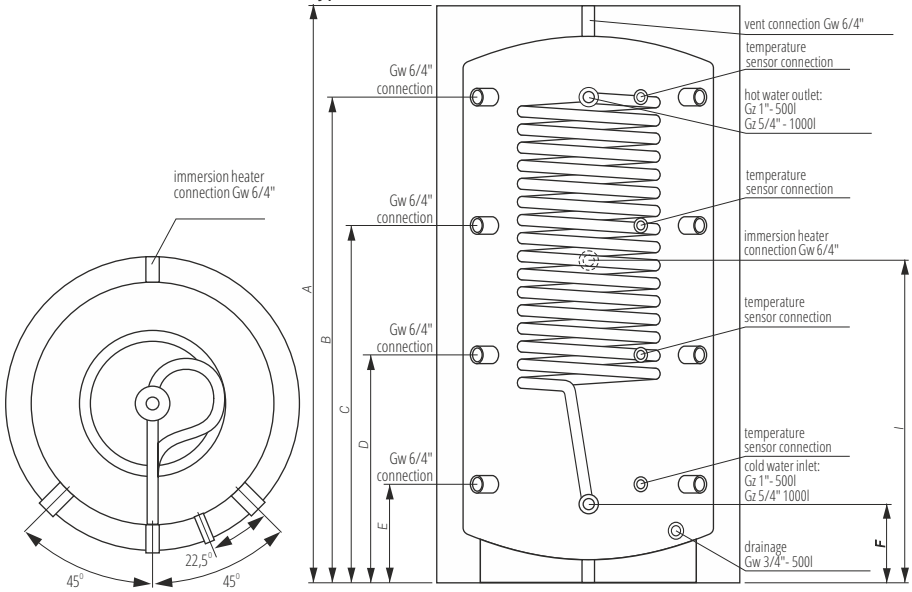

type SVWS

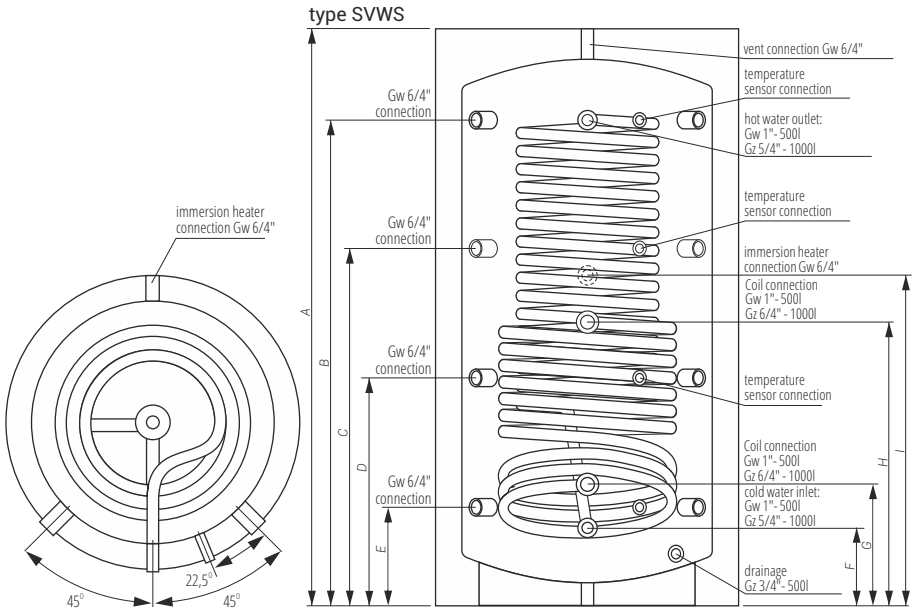

	Diameter (mm)	A (mm)	B (mm)	C (mm)	D (mm)	E (mm)	F (mm)	G (mm)	H (mm)	I (mm)
SVS-500	750	1677	1450	1040	624	212	212	-	-	820
SVS-1000	950	2132	1775	1304	833	362	290	-	-	1090
SVWS-500	750	1677	1450	1040	624	212	212	307	780	820
SVWS-1000	950	2132	1775	1304	833	362	290	412	966	1090

Technical data

Type	Capacity (l) buffer / DHW coil (l)	Surface area (m2) stainless steel coil DHW / steel (m^2)	Rated pressure (cylinder/ DHW coil/ steel coil) (MPa)	Thickness/ insulation material ** (mm)	Stand-by losses *** (W)
SVS-500	496/26/-	5,0/ -	0,3/0,6/-	50/PUR/NR	95
SVS-1000	902/28/-	5,5/ -	0,3/0,6/-	80/NEODUL/R	136
SVWS-500	496/26/10	5,0/1,65	0,3/0,6/1,0	50/PUR/NR	95
SVWS-1000	902/28/19	5,5/2,23	0,3/0,6/1,0	80/NEODUL/R	136

** Insulation: R- removable, NR- not removable.
*** In line with EU Commission resolution no. 812/2013, 814/2013.